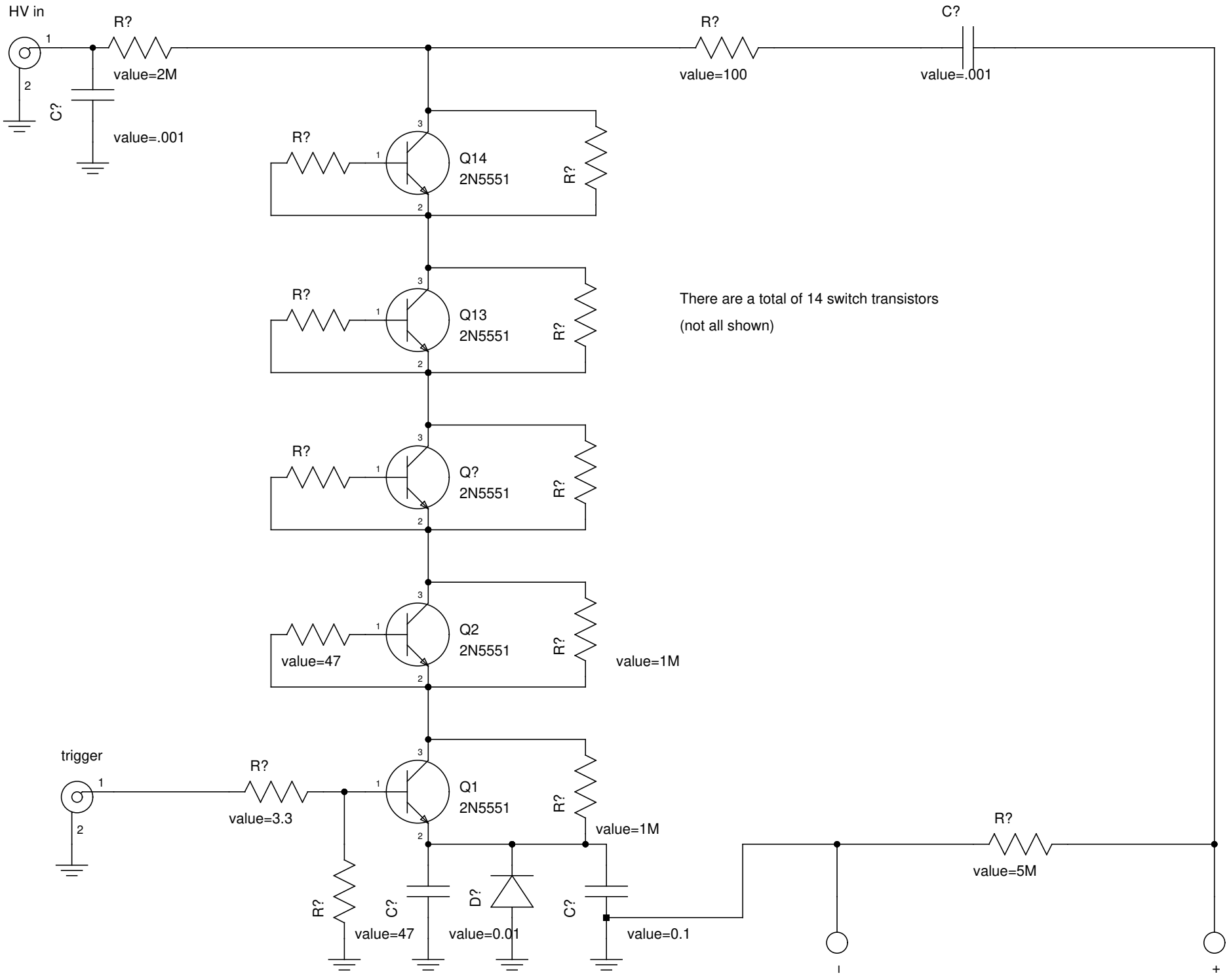
HV in
R?
value=2M
C?
value=.001
R?
value=100
C?
value=.001
R?
Q14
2N5551
R?
R?
Q13
2N5551
R?
There are a total of 14 switch transistors
(not all shown)
R?
Q?
2N5551
R?
R?
Q2
2N5551
R?
value=47
value=1M
trigger
R?
value=3.3
Q1
2N5551
R?
value=1M
R?
value=5M
R?
value=47
C?
value=0.01
D?
C?
value=0.1
-
+